LAPTOP SLANT
11-2U

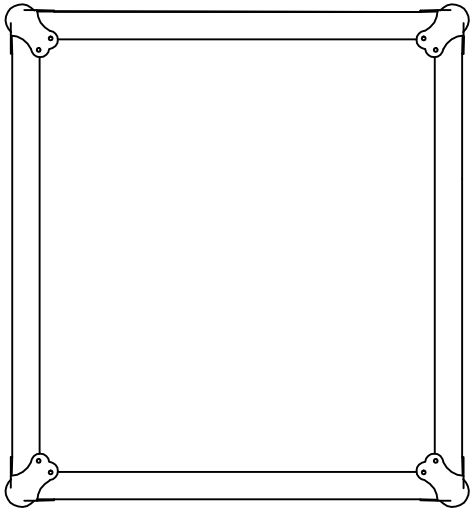

Top View

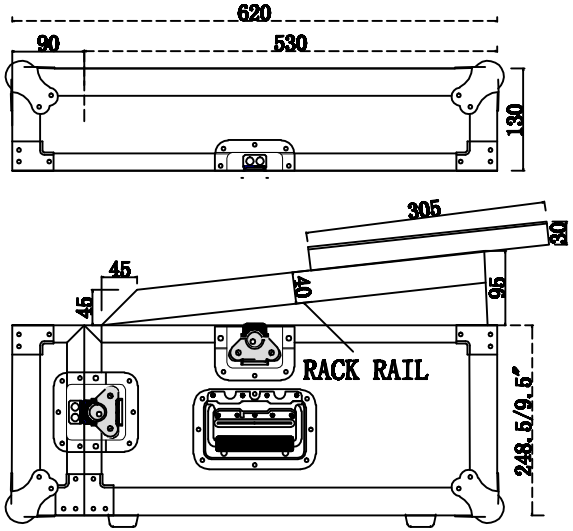

Side View

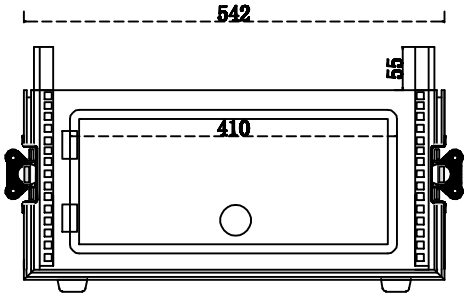
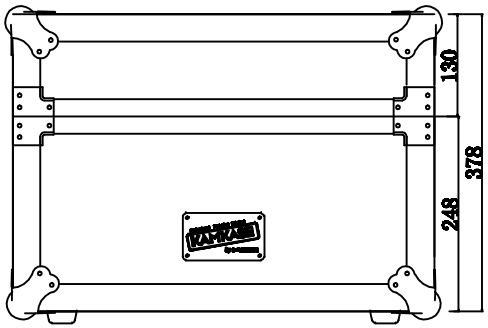
Front View