MOVING HEAD CASE

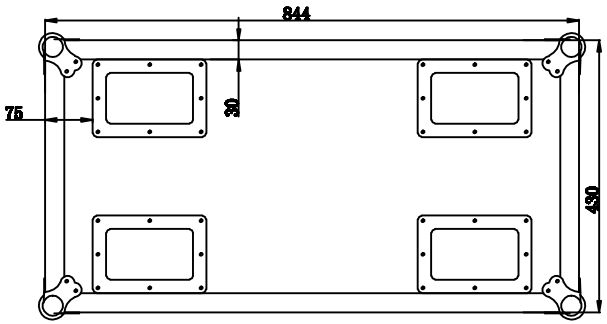

Top View

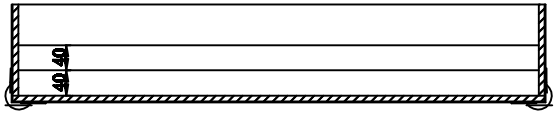

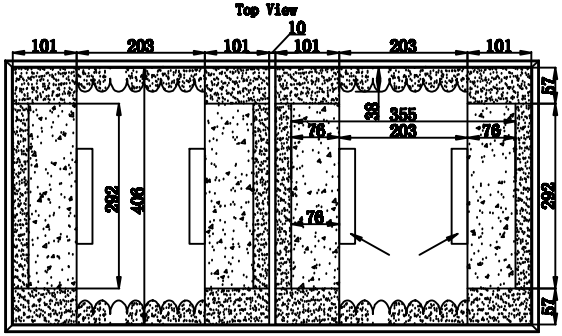

Top View

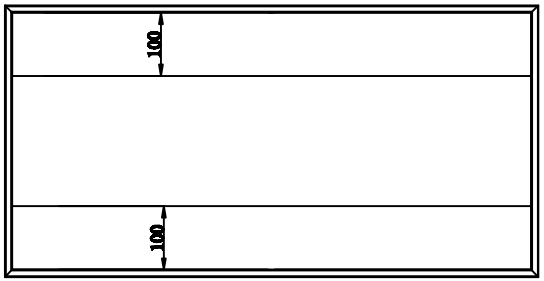

Top View

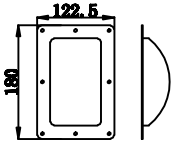

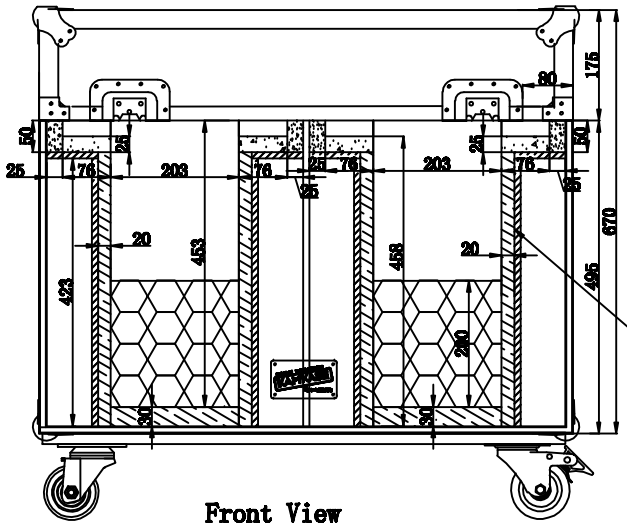

Front View

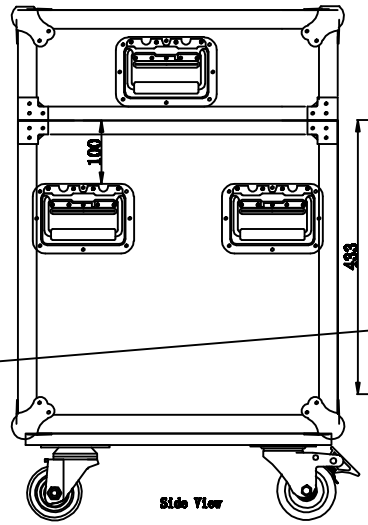
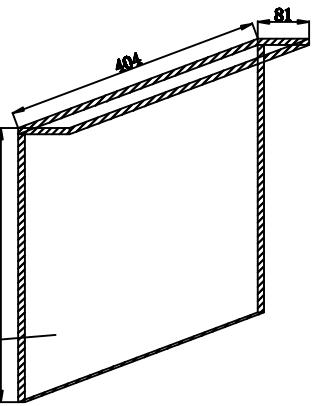
Side View