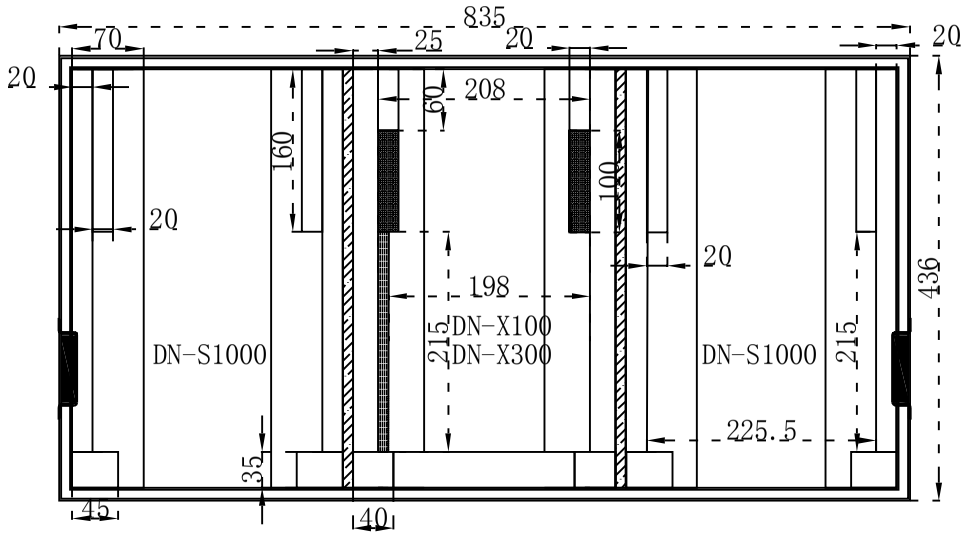

DJDNX31000

5750

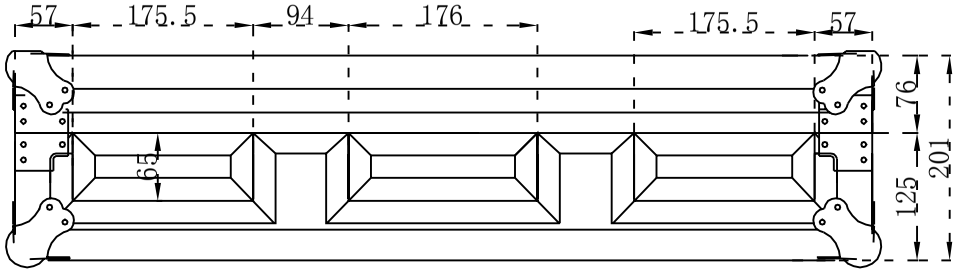

Side View

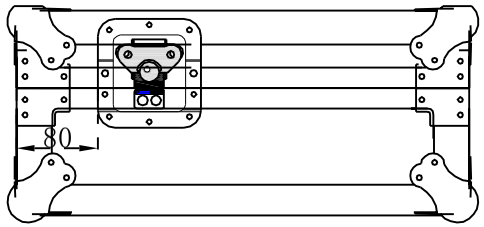
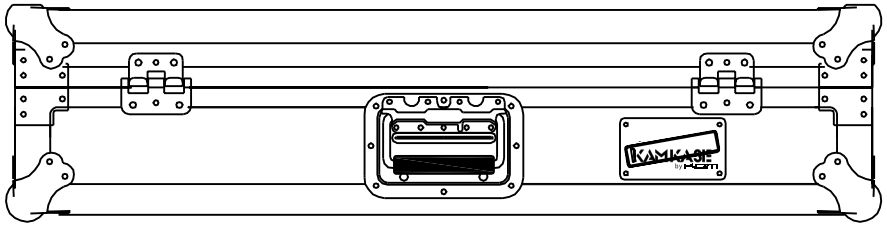
Side View